FIBOX PICCOLO ABS B 85 G

Sample photo

Order symbol: ABS B 85 G
Product nbr: 8784304

Description: Enclosure, ABS
Remarks: Grey cover

EAN: 6418074002013
El. number:

Finland	3423453
Denmark	8212001828
Italy	7211015
Sweden	2536704

Including: Base with screws for mounting plate/DIN-rail, cover with PUR gasket and polyamide cover screws.

Dimensions:

	L	W	H
mm:	110	80	85
inch:	4.3	3.1	3.3

Materials:

Material:	ABS
Base colour:	RAL 7035
Cover colour:	RAL 7035
Cover screws material:	Polyamide
Cover screws colour:	Grey
Gasket material:	Polyurethane

Temperatures:

Short term:	-40 … 80 °C
Continuous:	-40 … 60 °C
Short term:	-40 … 175 °F
Continuous:	-40 … 140 °F

Accessories:

B-MP	Mounting plate
B-3	DIN-35 Mounting rail
FP 22040	Mounting foot kit (2 pcs)

Rating:

Ingress Protection (EN 60529): IP 66/67
Impact Resistance (EN 50102): IK 07
Electrical insulation: Totally insulated
Halogen free (DIN/VDE 0472, Part 815): Yes
Flammability Rating (UL 746 C 5): UL 94 HB
Glow Wire Test (IEC 695-2-1) °C: 650
NEMA Class: NEMA 1, 4, 4X, 6, 6P, 12, 13

Certificates:

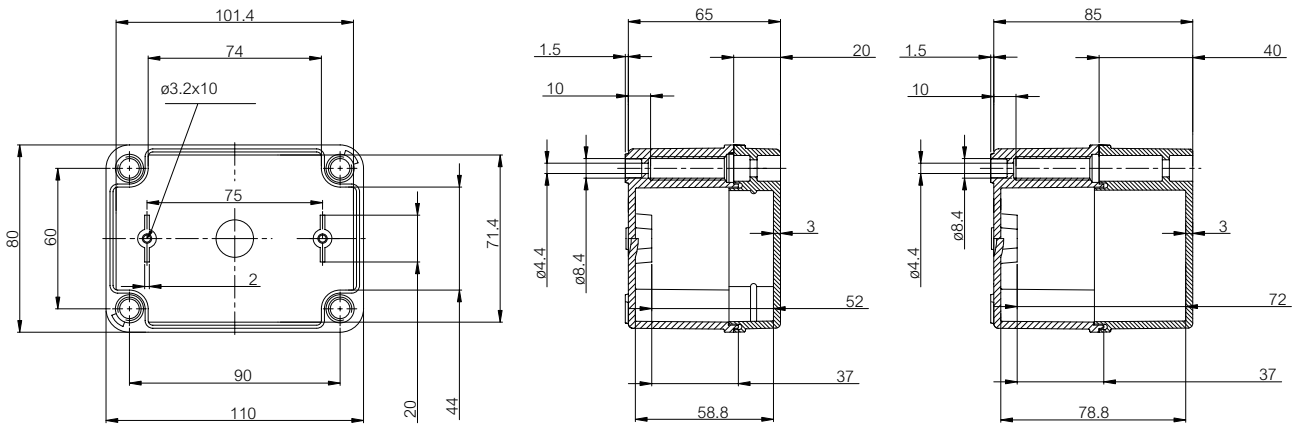

(c) Fibox OY, Data subject to change without notice