FIBOX CAB CAB PC 302018 G3B

Sample photo

Order symbol: CAB PC 302018 G3B
Product nbr: 8113332

Description: Cabinet, PC
Remarks: Lock on the long side

EAN: 6418074020048
El. number:

Finland	3424105
Denmark	8212019205
Italy	7821020
Sweden	2539965

Including: Cabinet base, door with EPDM gasket, 3mm double bit lock(s) with key, screws for mounting plate/DIN-rail and corner plugs.

Dimensions:	L	W	H
mm:	300	200	180
inch:	11.8	7.9	7.1

Materials:

Material:	PC
Base colour:	RAL 7035
Cover colour:	RAL 7035
Gasket material:	EPDM

Temperatures:

Short term:	-40 … 120 °C
Continuous:	-40 … 80 °C
Short term:	-40 … 250 °F
Continuous:	-40 … 175 °F

Accessories:

EKIV 23	Mounting plate
EKIV 17	DIN-35 Mounting rail
EKIV 27	DIN-35 Mounting rail
FP A 23	Swing-out door, aluminium
FP 23	Front plate
FP 12-23	Front Plate
DRF 23	DIN rail frame set
DRF 33	DIN rail frame set

Rating:

Ingress Protection (EN 60529): IP 65
Impact Resistance (EN 50102): IK 08
Electrical insulation: Totally insulated
Halogen free (DIN/VDE 0472, Part 815): Yes
UV resistance: UL 508
Flammability Rating (UL 746 C 5): UL 94 5V
Glow Wire Test (IEC 695-2-1) °C: 960
UL Type: UL TYPE 1, 4, 4X, 12, 13

Certificates:

Germanischer Lloyd (GL)
Underwriters Laboratories
Fimko
Lloyds Register of Shipping (LR)
Europe EN 50298 1998
UL Canada
Gost R

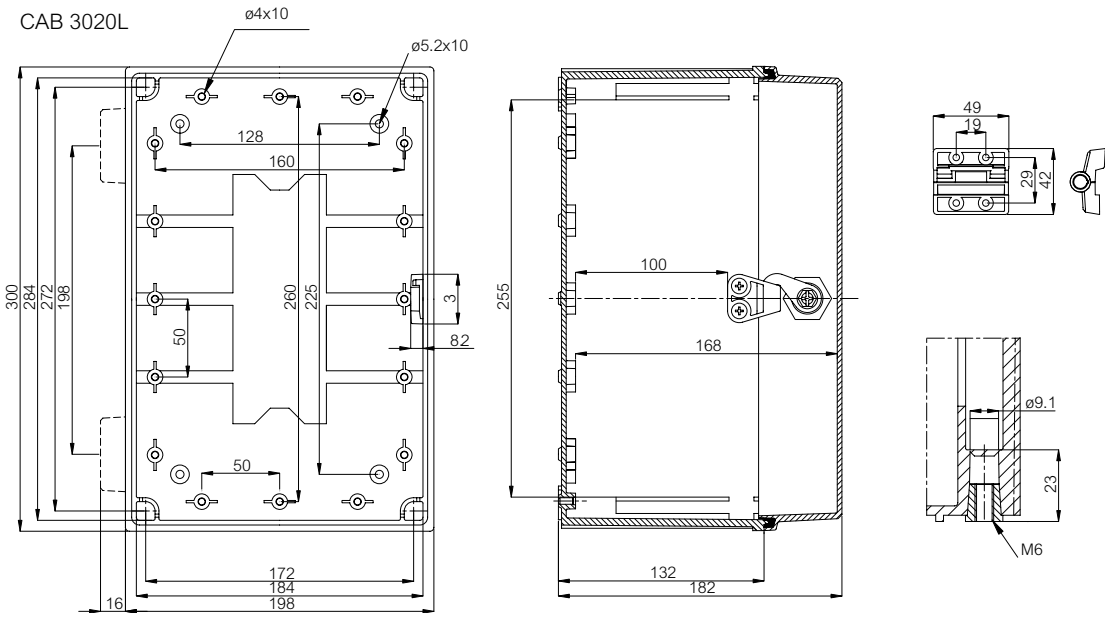

(c) Fibox OY, Data subject to change without notice